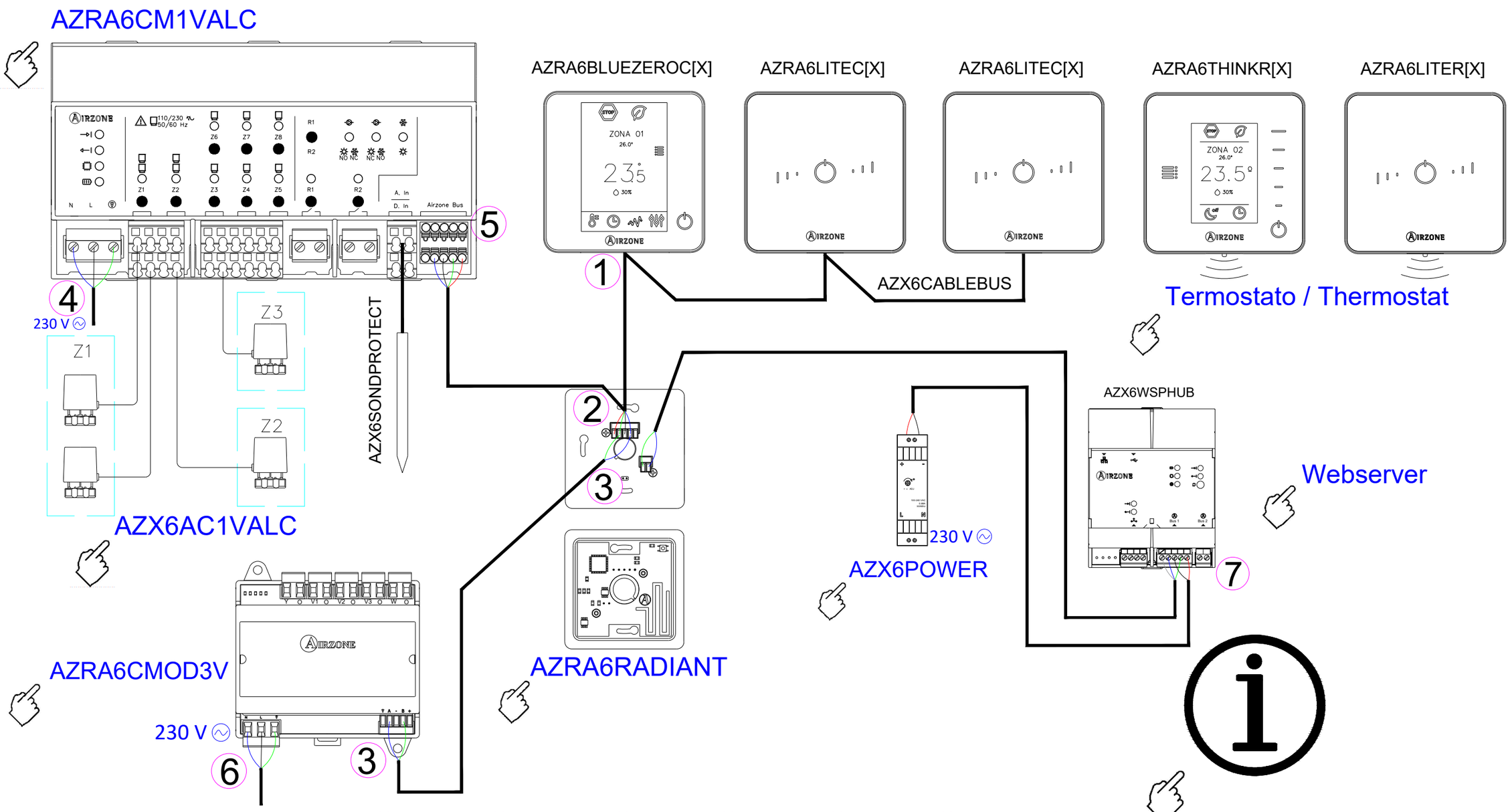

A	Azul I Blue I Azul I Bleu I Blu
–	Negro I Black I Negro I Noir I Nero
B	Verde I Green I Verde I Vert I Verde
+	Rojo I Red I Vermelho I Rouge I Rosso

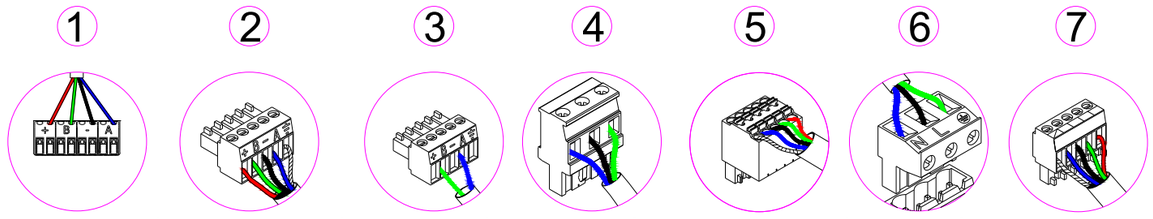

N	Neutro I Neutral I Neutro I Neutre I Neutro
L	Fase I Phase I Fase I Phase I Fase
⏚	Tierra I Ground I Terra I Terre I Terra

AIRZONE

PLAN	DETAIL DIAGRAM	PLAN 1/2
DATE : 2021		

EQUIPO HIDRÓNICO CON ELEMENTO RADIANTE HASTA 8 ZONAS

ES

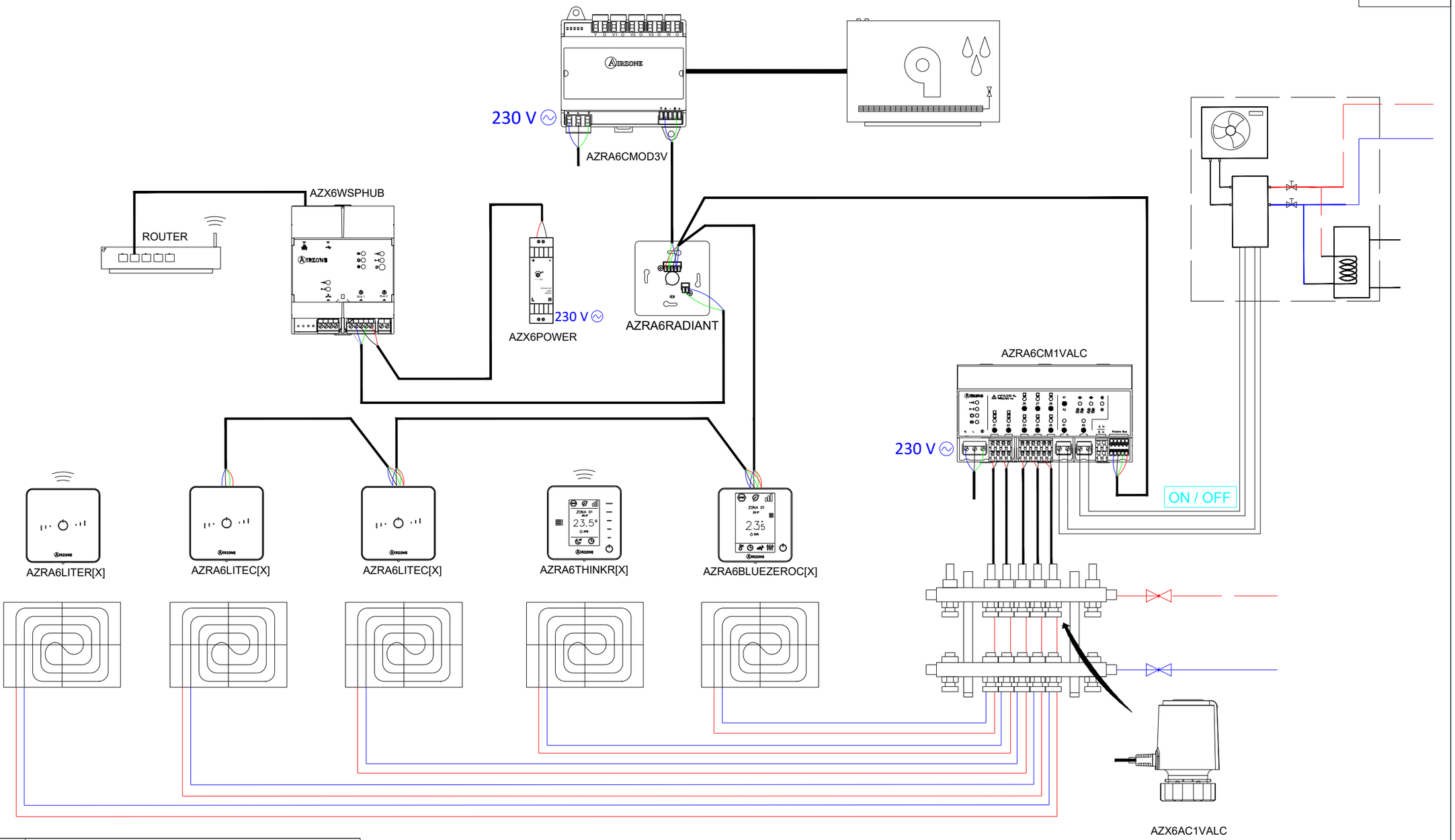

AZRA6RADIANT	CENTRAL DE SISTEMA AIRZONE RADIANT365
AZRA6BLUEZEROC[X]	TERMOSTATO BLUEFACE ZERO [COLOR] AIRZONE
AZRA6THINK[R][X]	TERMOSTATO [RADIO] THINK [COLOR] AIRZONE
AZRA6LITE[C/R][X]	TERMOSTATO [CABLE/RADIO] LITE [COLOR] AIRZONE
AZRA6CM1VALC	MÓDULO DE CONTROL AIRZONE RADIANT365
AZX6WSPHUB	WEBSERVER HUB AIRZONE CLOUD DUAL
AZX6AC1VALC	CABEZAL TERMOSTÁTICO CABLE AIRZONE
AZX6POWER	FUENTE DE ALIMENTACIÓN AIRZONE
AZRA6CMOD3V	MÓDULO DE CONTROL AIRZONE-DESHUMECTADOR 3 VELOCIDADES

AIRZONE

PLANO	ESQUEMA DE INSTALACIÓN	PLANO 2/2

REALIZADOR : DEPARTAMENTO DE PROYECTOS ALTRA CORPORACIÓN

FECHA : 2021

TÍTULO : EQUIPO HIDRÓNICO CON ELEMENTO RADIANTE HASTA 8 ZONAS

CONTACTO: gabinete.tecnico@airzone.es Teléfono: 900 400 445 www.airzonecontrol.com

UNIDADE HIDRÔNICA COM ELEMENTO RADIANTE ATÉ 8 ZONAS

PT

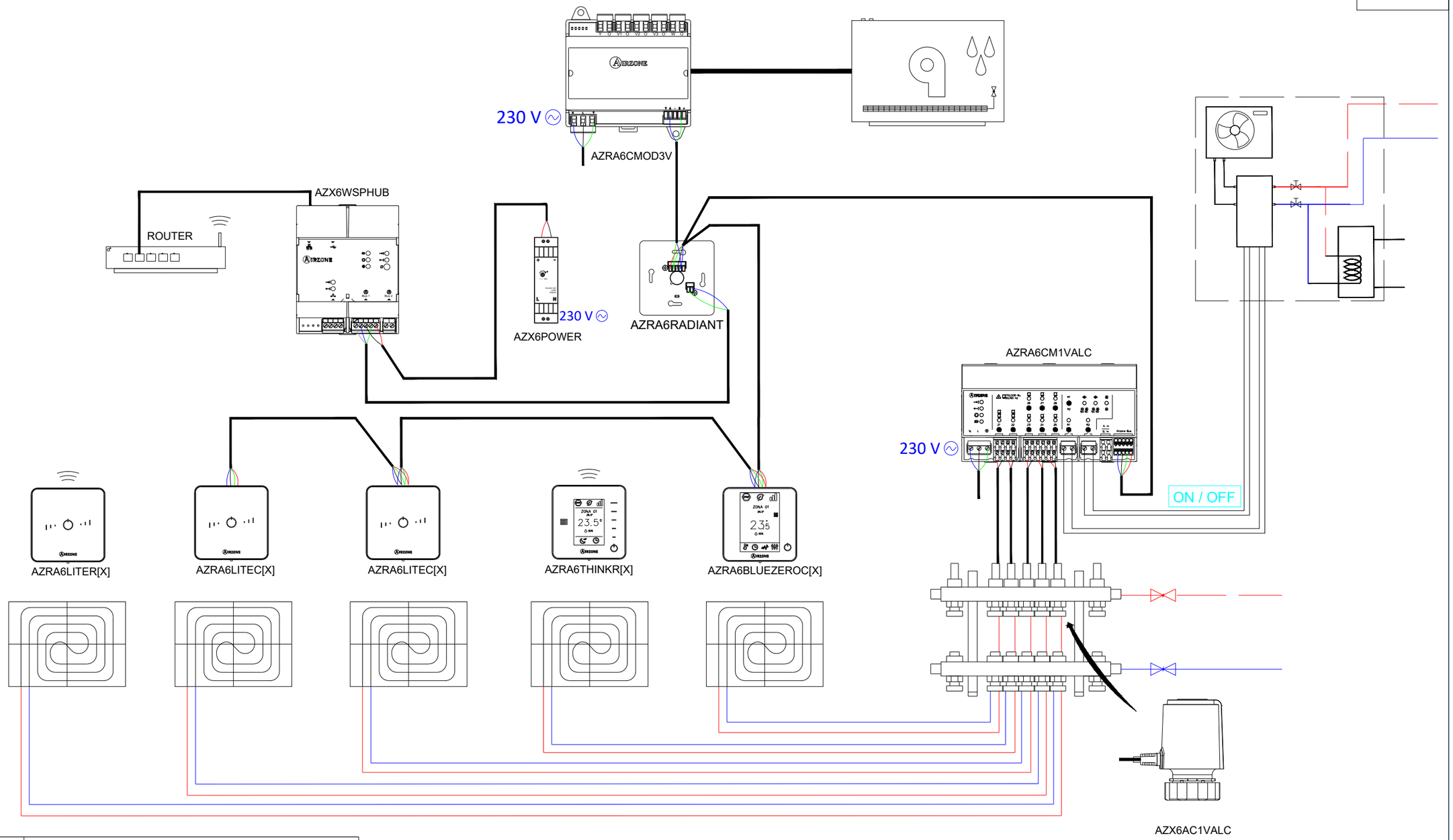

AZRA6RADIANT	CENTRAL DO SISTEMA AIRZONE RADIANT365
AZRA6BLUEZEROC[X]	TERMOSTATO BLUEFACE ZERO [COR] AIRZONE
AZRA6THINK[R][X]	TERMOSTATO [RADIO] THINK [COR] AIRZONE
AZRA6LITE[C/R][X]	TERMOSTATO [CABO/RADIO] LITE [COR] AIRZONE
AZRA6CM1VALC	MÓDULO DE CONTROLO AIRZONE RADIANT365
AZX6WSPHUB	WEBSERVER HUB AIRZONE CLOUD DUAL
AZX6AC1VALC	CABEÇA TERMOSTÁTICA POR CABO AIRZONE
AZX6POWER	FONTE DE ALIMENTAÇÃO AIRZONE
AZRA6CMOD3V	MÓDULO DE CONTROLO AIRZONE-DESUMIDIFICADOR 3 VELOCIDADES

AIRZONE

PLANO	ESQUEMA DE INSTALAÇÃO	PLANO 2/2

AUTOR : DEPARTAMENTO DE PROJETOS ALTRA CORPORACIÓN

DATA : 2021

TÍTULO : UNIDADE HIDRÔNICA COM ELEMENTO RADIANTE ATÉ 8 ZONAS

CONTATO: info@airzone.pt Teléfone: 800 500 858 www.airzone.pt

HYDRONIC PRODUCTION WITH RADIANT FLOOR. HEATING/COOLING MODE UP TO 8 ZONES

EN

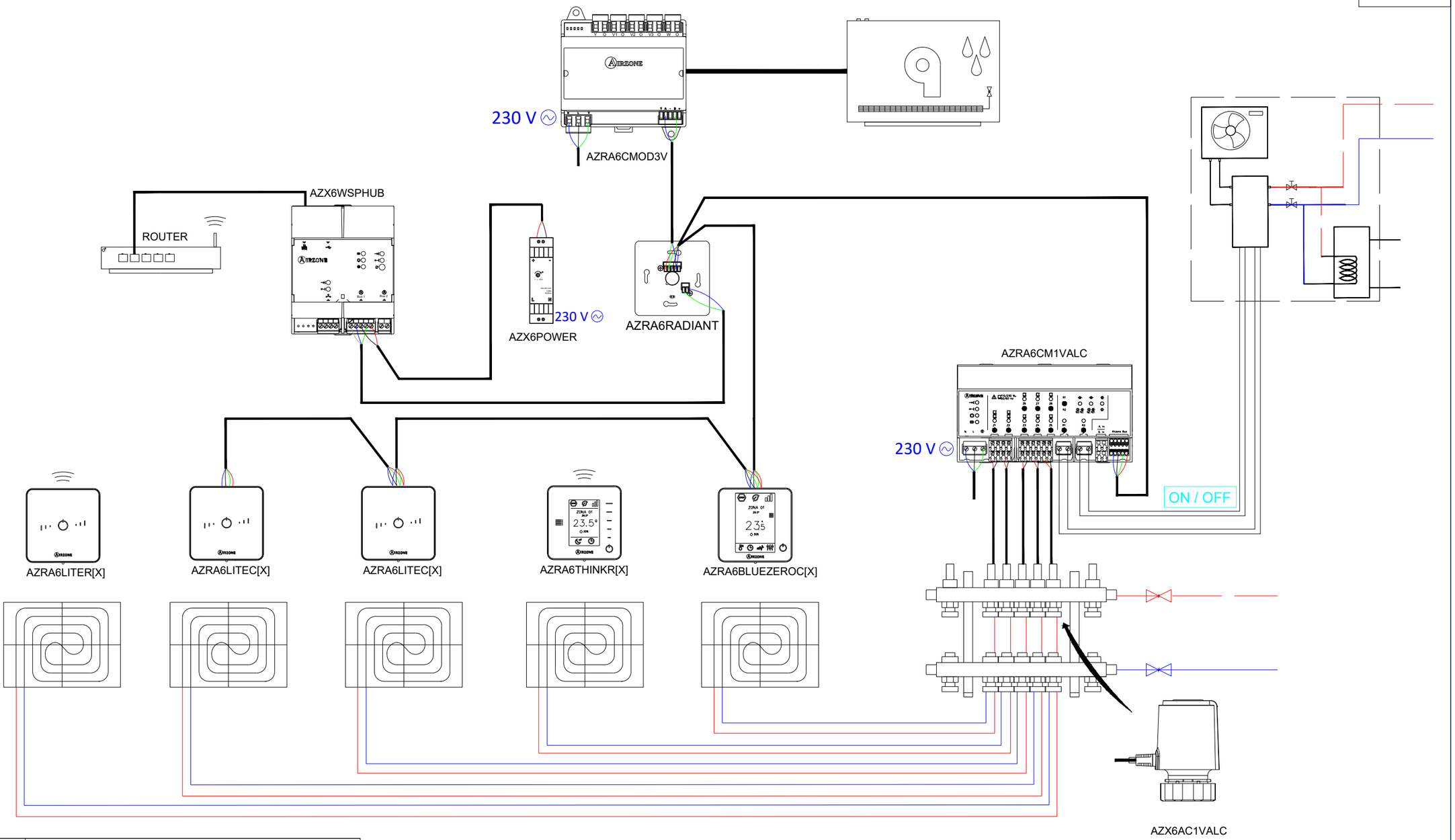

AZRA6RADIANT	AIRZONE RADIANT365 MAIN CONTROL BOARD
AZRA6BLUEZEROC[X]	AIRZONE BLUEFACE ZERO [COLOUR] THERMOSTAT
AZRA6THINK[R][X]	AIRZONE THINK [WIRELESS] [COLOUR] THERMOSTAT
AZRA6LITE[C/R][X]	AIRZONE LITE [WIRED/WIRELESS] [COLOUR] THERMOSTAT
AZRA6CM1VALC	AIRZONE CONTROL MODULE RADIANT365
AZX6WSPHUB	WEBSERVER HUB AIRZONE CLOUD DUAL
AZX6AC1VALC	AIRZONE WIRED THERMOSTATIC VALVE ACTUATOR
AZX6POWER	AIRZONE POWER SUPPLY
AZRA6CMOD3V	AIRZONE 3 SPEEDS DESHUMIDIFIER CONTROL MODULE

AIRZONE

PLAN	WIRING DIAGRAM	PLAN 2/2

DEVELOPER : PROJECT DEPARTMENT AIRZONE

DATE : 2021

FILE : HYDRONIC PRODUCTION WITH RADIANT FLOOR. HEATING/COOLING MODE UP TO 8 ZONES

CONTACT: projects@airzonecontrol.com Phone: 900 400 445 www.airzonecontrol.com

CONTRÔLE D'ÉLÉMENTS RAYONNANTS (CHAUD-FROID) JUSQU'À 8 ZONES (RADIANT365)

FR

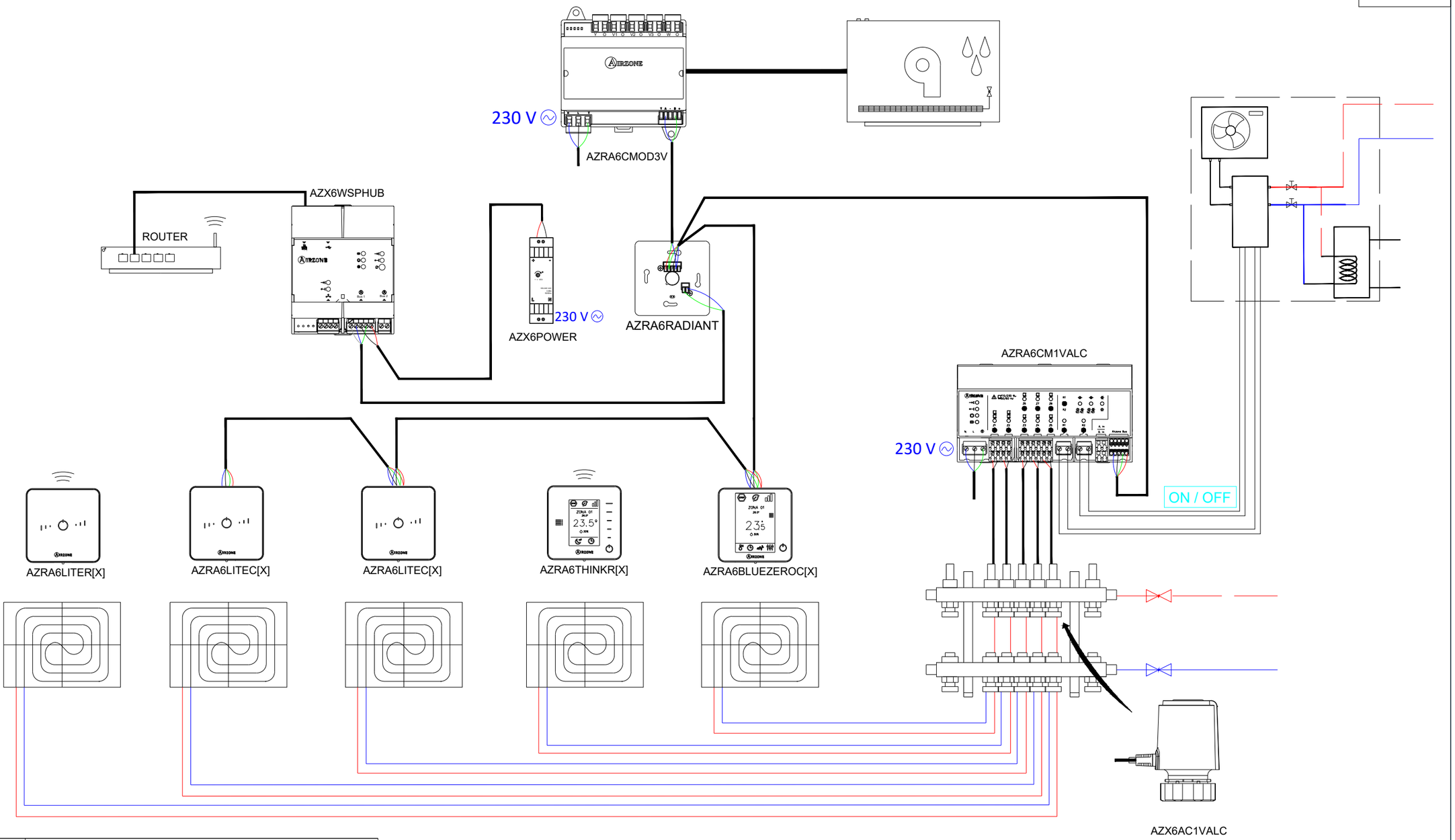

AZRA6RADIANT	PLATINE CENTRALE AIRZONE RADIANT365
AZRA6BLUEZEROC[X]	THERMOSTAT BLUEFACE ZERO FILAIRE [COULEUR] AIRZONE
AZRA6THINK[R][X]	THERMOSTAT THINK [RADIO] [COULEUR] AIRZONE
AZRA6LITE[C/R][X]	THERMOSTAT LITE [FILAIRE/RADIO] [COULEUR] AIRZONE
AZRA6CM1VALC	MODULE DE CONTRÔLE RADIANT AIRZONE D'ÉLECTROVANNES FILAIRES
AZX6WSPHUB	WEBSERVER HUB AIRZONE CLOUD DUAL
AZX6AC1VALC	MOTEUR ÉLECTROTHERMIQUE FILAIRE AIRZONE VALC
AZX6POWER	SOURCE D'ALIMENTATION AIRZONE
AZRA6CMOD3V	MODULE DE CONTRÔLE AIRZONE-DESHUMIDIFICATEUR 3 VITISSES

AIRZONE

PLAN	SCHÉMA D'INSTALLATION	PLAN 2/2

DESSINATEUR : DÉPARTEMENT PROJETS AIRZONE

DATE : 2021

TITRE : CONTRÔLE D'ÉLÉMENTS RAYONNANTS (CHAUD-FROID) JUSQU'À 8 ZONES

CONTACT: Mail: projets@airzonefrance.fr Téléphone: 01 82 88 51 49 Page web: www.airzonecontrol.com

IMPIANTO AD ACQUA CON PAVIMENTO RADIANTE FINO A 8 ZONES

IT

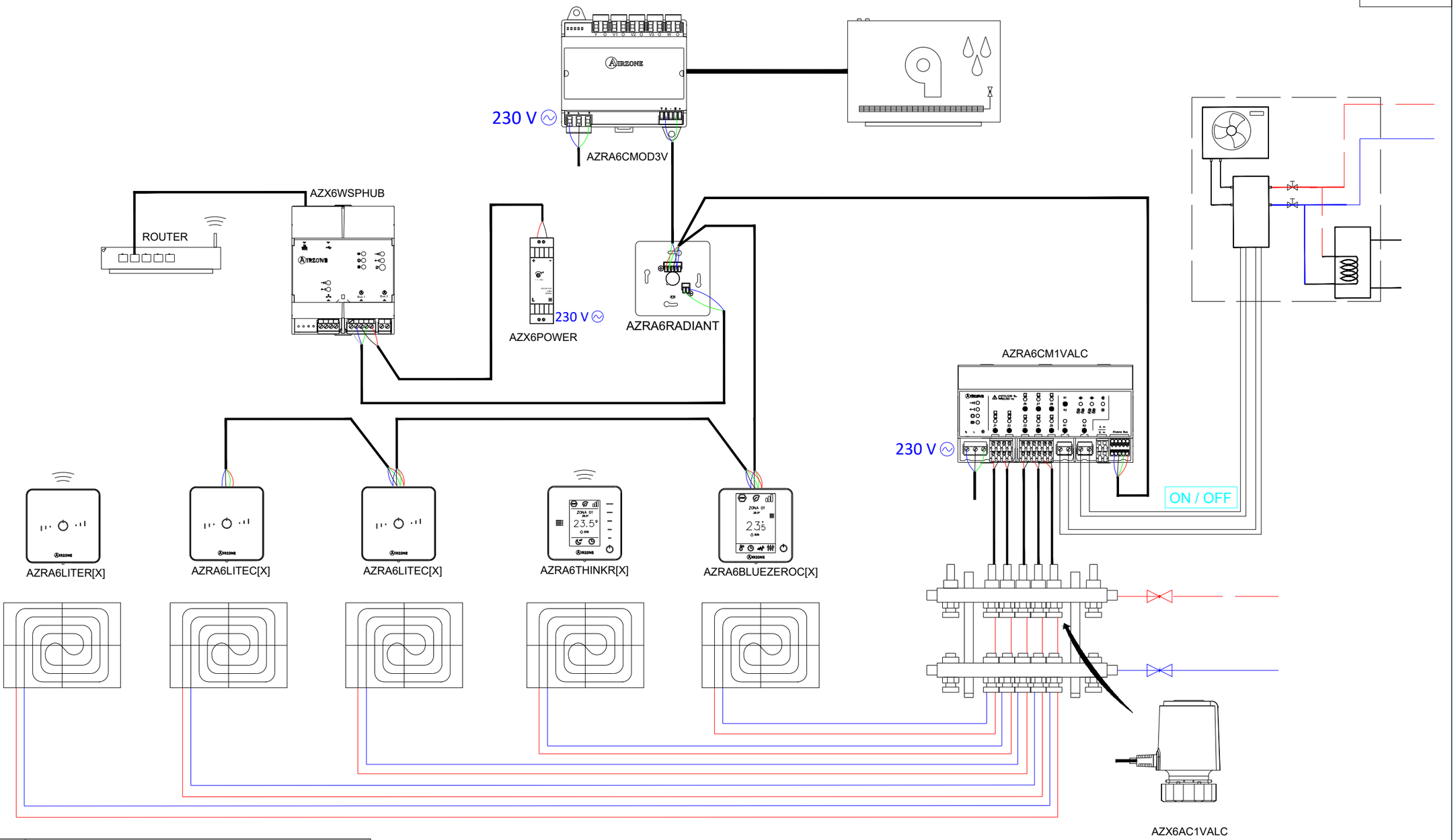

AZRA6RADIANT	SCHEDA CENTRALE AIRZONE RADIANT365
AZRA6BLUEZEROC[X]	TERMOSTATO BLUEFACE ZERO [COLORE] AIRZONE
AZRA6THINK[R][X]	TERMOSTATO THINK [RADIO] [COLORE] AIRZONE
AZRA6LITE[C/R][X]	TERMOSTATO LITE [CAVO/RADIO] [COLORE] AIRZONE
AZRA6CM1VALC	SCHEDA DI CONTROLLO AIRZONE RADIANT365 PER VALVOLE CABLEATE
AZX6WSPHUB	WEBSERVER HUB AIRZONE CLOUD DUAL
AZX6AC1VALC	CABEZAL TERMOSTÁTICO CABLE AIRZONE
AZX6POWER	TRANSFORMATORE DI ALIMENTAZIONE AIRZONE
AZRA6CMOD3V	SCHEDA CONTROLLO DEUMIDIFICAZIONE A 3 VELOCITÀ

AIRZONE

PIANO	ESQUEMA DE INSTALACIÓN	PIANO 2/2

DISEGNATO DA : UFFICIO PROGETTI ALTRA CORPORACIÓN

DATA : 2021

TÍTOLO : IMPIANTO AD ACQUA CON PAVIMENTO RADIANTE FINO A 8 ZONES

CONTATTO: progetti@airzoneitalia.it Telefono: 02568 14756 www.airzoneitalia.it